CSc 453 — Compilers and Systems Software

2 : Teensy Simple I

Christian Collberg
Department of Computer Science
University of Arizona
collberg@gmail.com

Copyright © 2009 Christian Collberg

August 23, 2009

1

Introduction

2 A simple language and compiler

- To understand the overall organization of a modern compiler, we will design a minimal language, TEENSY, and a compiler for this language, SIMPLE.
- Get the source from the file `Simple1.zip` from the class website. Then `unzip Simple1.zip`; `cd PROGRAMS`; `make`; `make test`.
- Here's a simple TEENSY program:

```
BEGIN
   x = 5; y = 99; z = y + x + 9; PRINT z;
END
```

3 TEENSY's concrete grammar

program	→	'BEGIN' stats 'END'
stats	→	stat stats | ϵ
stat	→	ident '=' expr ';'
	|	'PRINT' expr ';'
expr	→	expr '+' expr | ident | int
ident	→	LETTER idp
idp	→	LETTER idp | DIGIT idp | ϵ
int	→	DIGIT intp
intp	→	DIGIT intp | ϵ

4 Java classes in the SIMPLE compiler

- lexical analysis (`Token`, `Lex`),
- parsing (`Matcher`, `Parse`),
- abstract syntax tree construction (`Parse`, `AST`, `PROGRAM`, `STAT`, `STATSEQ`, `ASSIGN`, `PRINT`, `EXPR`, `NULL`, `IDENT`, `INTLIT`, `BINOP`),
- semantic analysis (`SyTab`, `Sem`),
- tree-walk interpretation (`Eval`), optimization (`Opt`),
- intermediate code generation (`IR`, `GenIR`),
- stack-code interpretation (`Interpreter`), and
- machine-code generation (`Mips`).
- The class `Compiler` ties it all together.

5 Overview – Lexing and Parsing

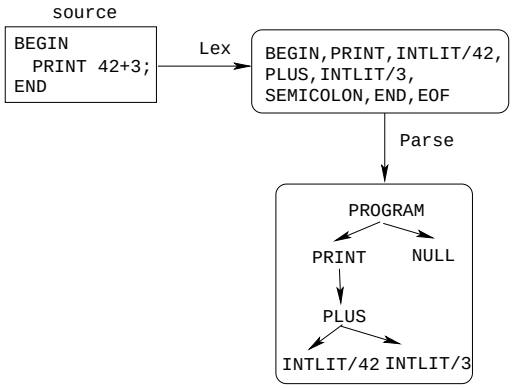

6 Overview – Semantics & Optimization

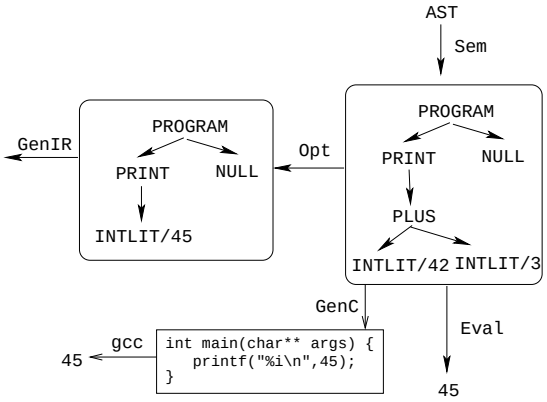

7 Overview – IR & Code Generation

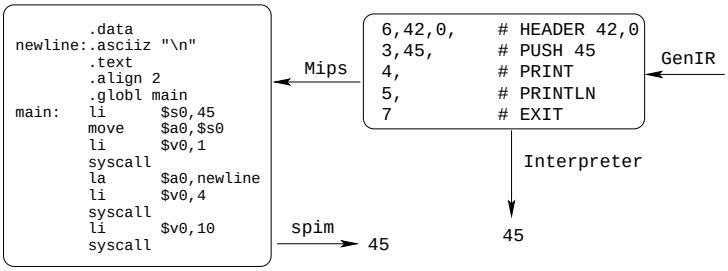

8 Token.java

```
public class Token {
    public final static int ILLEGAL    = 0;
    public final static int PLUS       = 1;
    public final static int INTLIT     = 2;
    public final static int IDENT      = 3;
    public final static int SEMICOLON  = 4;
    public final static int EQUAL      = 5;
    public final static int BEGIN      = 6;
    public final static int END        = 7;
    public final static int PRINT      = 8;
    public final static int EOF        = 9;

    public int kind;
    public String ident; public int value;
    public int position;
}
```

9 Lex.java

```
char ch;                // lookahead character
boolean done = false;   // reached end-of-file

public Lex(String filename) throws IOException {
    str = new LineNumberReader(new FileReader(filename));
    get();
}

// read the next input character
void get() {...}

Token scanNumber() {
    ...
    return new Token(Token.INTLIT, ival);
}
```

10 Lex.java...

```
Token scanName()  {
    String ident = "";
    while ((!done) && Character.isLetterOrDigit(ch)) {
        ident+=ch; get();}
    if (ident.equals("BEGIN"))
         return new Token(Token.BEGIN);
    else if (ident.equals("END"))
         return new Token(Token.END);
    else if (ident.equals("PRINT"))
         return new Token(Token.PRINT);
    else
         return new Token(Token.IDENT, ident);
}
```

11 Lex.java...

```
public Token nextToken() {
    while ((!done) && ch <= ' ') get();
    if (done) return new Token(Token.EOF);
    switch (ch) {
        case '+': get(); return new Token(Token.PLUS);
        case ';': get(); return new Token(Token.SEMICOLON);
        case '=': get(); return new Token(Token.EQUAL);
        default:  if (Character.isLetter(ch))
                      return scanName();
                  else if (Character.isDigit(ch))
                      return scanNumber();
                  else {
                      get(); return new Token(Token.ILLEGAL);
                   }
     }
}
```

12 Parsing

The Lexer takes an input Teensy source file

```
BEGIN
   PRINT y;
END
```

and generates a stream of tokens

```
BEGIN
PRINT
IDENT: y
SEMICOLON
END
EOF
```

which is then consumed by the parser.

13 Parsing

- The parser does two things:
  1. it checks that the input program conforms to the syntax of the language. If not, error messages are generated.
  2. it generates an abstract syntax tree (AST), a tree representation of the input program.
- SIMPLE supports two parsers: `Matcher` only tests for syntax conformance, `Parse` also generates the AST.
- The AST forms the basis for all further processing in SIMPLE.

14 Matcher.java...

```
Lex scanner;
Token currentToken;

public Matcher (Lex scanner) {
   this.scanner = scanner;
   next();
}

void next() {
   currentToken = scanner.nextToken();
}

boolean lookahead(int tokenKind) {
   return currentToken.kind == tokenKind;
}
```

15 Matcher.java...

```
void match(int tokenKind) {
   if (!lookahead(tokenKind)) {
        System.err.println("Parsing error");
    }
    next();
}

public void parse() {
   ENTER("parse");
   match(Token.BEGIN);
   stats();
   match(Token.END);
   match(Token.EOF);
   EXIT("parse");
}
```

16 Matcher.java...

```
void stats() {
   if (lookahead(Token.IDENT)) {
      assign();  match(Token.SEMICOLON); stats();
   } else if (lookahead(Token.PRINT)) {
       print();  match(Token.SEMICOLON); stats();
   }
}

void assign() {
   match(Token.IDENT); match(Token.EQUAL); expr();
}

void print() {
   match(Token.PRINT); expr();
}
```

17 Matcher.java...

```
void expr() {
   factor();
   while (lookahead(Token.PLUS)) {
      match(Token.PLUS);
      factor();
   }
}

void factor() {
   if (lookahead(Token.IDENT)) {
       match(Token.IDENT);
   } else if (lookahead(Token.INTLIT)) {
       match(Token.INTLIT);
   }
}
```

18 Parsing...

```
> cat test23
BEGIN
   PRINT y;
END
```

```
> java Matcher test2
ENTER parse
   ENTER stats
      ENTER print
         ENTER expr
            ENTER factor
            EXIT factor
         EXIT expr
      EXIT print
      ENTER stats
      EXIT stats
   EXIT stats
EXIT parse
```

19 Concrete vs. Abstract Syntax

- A language's concrete syntax describes how it is written by the programmer – where whitspace goes, where semicolons are needed, etc.
- The abstract syntax describes the "logical structure" of the language – that while-statements have two parts (the expresion and the loop body), that procedure calls consist of a sequence of actual parameters (expression) and the name of the called procedure, etc.
- The abstract syntax also defines the nodes of the abstract syntax tree. For example, an AST while-node would have two children, one pointing to the expression subtree, the other to the loop body subtree.

20 Teensy's Abstract Syntax

$$
\begin{array}{rcl}
\mathsf{PROGRAM} & \rightarrow & \mathsf{STATSEQ} \\
\mathsf{STATSEQ} & \rightarrow & \mathsf{STAT\ STATSEQ} \\
 & | & \mathsf{NULL} \\
\mathsf{STAT} & \rightarrow & \mathsf{ASSIGN} \\
 & | & \mathsf{PRINT} \\
\mathsf{ASSIGN} & \rightarrow & \mathsf{ident\ EXPR} \\
\mathsf{PRINT} & \rightarrow & \mathsf{EXPR} \\
\mathsf{EXPR} & \rightarrow & \mathsf{BINOP} \mid \mathsf{IDENT} \mid \mathsf{INTLIT} \\
\mathsf{BINOP} & \rightarrow & \mathsf{op\ EXPR\ EXPR} \\
\mathsf{IDENT} & \rightarrow & \mathsf{ident} \\
\mathsf{INTLIT} & \rightarrow & \mathsf{int}
\end{array}
$$

21 AST, EXPR, INTLIT

```
public abstract class AST {}
```

```
public abstract class EXPR extends AST {}
```

```
public class INTLIT extends EXPR {
    public int val;
    public INTLIT(int val) {this.val = val;}
}
```

```
public class IDENT extends EXPR {
    public String ident;
    public IDENT(String ident) {
       this.ident = ident;}
}
```

22 BINOP.java

```
public class BINOP extends EXPR {
   public int OP;
   public EXPR left, right;

   public BINOP(int OP, EXPR left, EXPR right) {
      this.OP=OP; this.left=left;
                  this.right=right;}

   public String toString() {
      String op = (OP == Token.PLUS)?"+":"";
      return "("+op+", "+left.toString()+", "+
             right.toString()+")";}
}
```

23 Building the AST – Parse.java

```
AST parse() {
    match(Token.BEGIN);
    STATSEQ s = stats();
    match(Token.END); match(Token.EOF);
    return new PROGRAM(s);
}

STATSEQ stats() {
   STAT stat;
   if (lookahead(Token.IDENT))      stat = assign();
   else if (lookahead(Token.PRINT)) stat = print();
   else                             return new NULL();
   match(Token.SEMICOLON);
   return new STATSEQ(stat, stats());
}
```

24 Parse.java...

```
STAT assign() {
    String ident = currentToken.ident;
    match(Token.IDENT);  match(Token.EQUAL);
    return new ASSIGN(ident, expr());
}

EXPR expr() {
   EXPR f = factor();
   while (lookahead(Token.PLUS)) {
      match(Token.PLUS);
      f = new BINOP(Token.PLUS, f, factor());
   }
   return f;
```

```
}
```

25 Parse.java...

```
EXPR factor() {
    EXPR expr = null;
    if (lookahead(Token.IDENT)) {
       expr = new IDENT(currentToken.ident);
       match(Token.IDENT);
    } else if (lookahead(Token.INTLIT)) {
       expr = new INTLIT(currentToken.value);
       match(Token.INTLIT);
    }
    return expr;
}
```

26 Parsing...

```
> cat test4
BEGIN
   x = 5;
   y = 99;
   z = y + x + 9;
   PRINT z;
END
> java Parse test4
PROGRAM
   (ASSIGN x, (INTLIT 5))
   (ASSIGN y, (INTLIT 99))
   (ASSIGN z, (+, (+, (IDENT y), (IDENT x)), (INTLIT 9)))
   (PRINT (IDENT z))
   NULL
```

27 Semantic Analysis

- The only possible semantic error in TEENSY is a variable being used before it's first defined.
- `Sem.java` walks the AST, and inserts any identifiers found on the left hand side of an assignment statement in the symbol table.
- The symbol table is defined in `SyTab.java`.
- Each name inserted into the table is mapped to a number.
- Notice how similar the code is in `Eval.java`, `Sem.java`, `Opt.java`, and `GenIR.java`. They all do recursive tree walks over the abstract syntax tree.

28 SyTab.java – Symbol Table

```
Hashtable sytab = new Hashtable();
int currentID = 0;
```

```
public void insert(String ident) {
   if (!sytab.containsKey(ident))
      sytab.put(ident, new java.lang.Integer(currentID++));
}

public int lookup(String ident) {
   if (sytab.containsKey(ident))
      return ((Integer)sytab.get(ident)).intValue();
   else  return -1;
}

public int size() {return sytab.size();}
```

29 Sem.java – Semantic Analysis

```
public SyTab sytab = new SyTab();

void program(PROGRAM n) {stats(n.stats);}

void stats(STATSEQ n) {
   if (n instanceof NULL) return;
   stat(n.stat);  stats(n.next);
}

void stat(STAT n) {
   if (n instanceof ASSIGN)     assign((ASSIGN)n);
   else if (n instanceof PRINT) print((PRINT)n);
}
```

30 Sem.java – Semantic Analysis...

```
void assign(ASSIGN n) {sytab.insert(n.ident);expr(n.expr);}
void print(PRINT n) {expr(n.expr);}

void expr(EXPR n) {
   if (n instanceof IDENT)        ident((IDENT) n);
   else if (n instanceof INTLIT)  intlit((INTLIT) n);
   else if (n instanceof BINOP)   binop((BINOP) n);
}

void ident(IDENT n) {
   if (sytab.lookup(n.ident)<0) println("Undeclared!");
}

void intlit(INTLIT n) {}
void binop(BINOP n) {expr(n.left); expr(n.right);}
```

31 Eval.java – AST Evaluation

```
int[] memory;        // Variable store.

void program(PROGRAM n) {
   memory = new int[sem.sytab.size()]; stats(n.stats);
}

void stats(STATSEQ n) {
   if (!(n instanceof NULL)) {stat(n.stat); stats(n.next)}
}

void stat(STAT n) {
   if (n instanceof ASSIGN)     assign((ASSIGN)n);
   else if (n instanceof PRINT) print((PRINT)n);
}
```

32 Eval.java...

```
void assign(ASSIGN n) {
    memory[sem.sytab.lookup(n.ident)] = expr(n.expr);
}

void print(PRINT n) {
   System.out.println(expr(n.expr));
}

int expr(EXPR n) {
   if (n instanceof IDENT)       return ident((IDENT) n);
   else if (n instanceof INTLIT) return intlit((INTLIT) n);
   else if (n instanceof BINOP)  return binop((BINOP) n);
   return -1;
}
```

33 Eval.java...

```
int ident(IDENT n) {
    return memory[sem.sytab.lookup(n.ident)];
}

int intlit(INTLIT n) {
   return n.val;
}

int binop(BINOP n) {
  if (n.OP == Token.PLUS)
      return expr(n.left) + expr(n.right);
  return -1;
}
```

34 IR Generation

- SIMPLE uses a straight-forward stack-based intermediate representation. There are only 8 bytecodes.
- `IR.java` defines the opcodes.
- `GenIR` walks the AST and emits code. The code is simply an array of integers.

35 `IR.java` – IR Generation

```
public static final int ADD    = 0;
public static final int LOAD   = 1;
public static final int STORE  = 2;
public static final int PUSH   = 3;
public static final int PRINT  = 4;
public static final int PRINTLN= 5;
public static final int HEADER = 6;
public static final int EXIT   = 7;

public static final int MAGIC  = 42;

public static int[] read(String filename) {...}
public static void write(int code[], int pc) {...}
```

36 IR Opcode Semantics

mnemonic	Op	stack-pre	stack-post	side-effects
ADD	0	[A,B]	[A+B]	
LOAD X	1	[]	[Memory[X]]	
STORE X	2	[A]	[]	Memory[X] = A
PUSH X	3	[]	[X]	
PRINT	4	[A]	[]	Print A
PRINTLN	5	[]	[]	Print a newline
HEADER M,V	6	[]	[]	
EXIT	7	[]	[]	The interpreter exits

37 `GenIR.java`

```
int pc = 0;
public int[] code = new int[100];
void add(int instr) {code[pc++] = instr;}

void program(PROGRAM n) {
   add(IR.HEADER);  add(IR.MAGIC); add(sem.sytab.size());
   stats(n.stats);
   add(IR.EXIT);
}

void stats(STATSEQ n) {
   if (n instanceof NULL) return;
   stat(n.stat);
```

```
   stats(n.next);
}
```

38 GenIR.java...

```
void stat(STAT n) {
   if (n instanceof ASSIGN)     assign((ASSIGN)n);
   else if (n instanceof PRINT)  print((PRINT)n);
}

void assign(ASSIGN n) {
    expr(n.expr);
    add(IR.STORE);
    add(sem.sytab.lookup(n.ident));
}

void expr(EXPR n) {
   if      (n instanceof IDENT)    ident((IDENT) n);
   else if (n instanceof INTLIT)   intlit((INTLIT) n);
   else if (n instanceof BINOP)    binop((BINOP) n);
}
```

39 GenIR.java...

```
void ident(IDENT n) {
    add(IR.LOAD); add(sem.sytab.lookup(n.ident));
}

void intlit(INTLIT n) {
    add(IR.PUSH); add(n.val);
}

void binop(BINOP n) {
   expr(n.left); expr(n.right);
   if (n.OP == Token.PLUS) add(IR.ADD);
}
```

40 Interpreting the IR – Interpreter.java

```
static void run (int[] prog){
   int[] memory=null; int pc = 0;
   while (true) {
   switch (prog[pc]) {
      case IR.HEADER    : {
         if (prog[pc+1]!=IR.MAGIC) {...}
         memory = new int[prog[pc+2]]; pc+=3; break;
      }
      case IR.ADD    : {
        int right=pop(); int left=pop();
        push(left+right); pc++; break;
```

```
      }
      case IR.LOAD   : {
         push(memory[(int)prog[pc+1]]); pc+=2; break;
      }
```

41 Interpreting the IR – `Interpreter.java`...

```
      case IR.STORE  : {
         memory[prog[pc+1]] = pop(); pc+=2; break;
      }
      case IR.PUSH  : {
         push(prog[pc+1]); pc+=2; break;
      }
      case IR.PRINT  : {
         System.out.print(pop()); pc++; break;
      }
      case IR.PRINTLN: {
         System.out.println(); pc++; break;
      }
      case IR.EXIT   : return;
      default :
}}}
```

42

```
> cat test7
BEGIN
   PRINT 42+3;
END
```

```
> java GenIR test7 | tee test7.vm
6
42
0
3
42
3
3
0
4
5
7
> java Interpreter test7.vm
45
```

43 Code generation

- The code generator "simulates" the execution of the IR code, but instead of operating on a stack of computed values (the way `Interpreter.java` has), we have a stack of register names. These are the registers into which the current subexpressions have been computed.
- `freeReg` returns the next available register. We don't attempt to handle the case when we run out of registers, nor do we attempt to minimize the number of registers used.

44 Code generation – Mips.java

```
// Collection of free registers.
static String[] regs = {"$s0","$s1","$s2","$s3",...};
int nextReg = 0;

void initRegs() {nextReg = 0;}
String freeReg() {return regs[nextReg++]; }

// Register stack.
String[] stack = new String[100];
int sp = 0;
void push (String v) {stack[sp++] = v;}
String pop() {return stack[--sp]; }
```

45 Code generation – Mips.java

```
public String code = "";
void add(String instr) {code += instr + "\n";}

void translate() {
   int pc = 0; initRegs();
   while (true) {
   switch (prog[pc]) {
      case IR.HEADER    : {
         add(".data"); add("newline:.asciiz \"\\n\"");
         int vars = prog[pc+2];
         for(int i=0; i<vars; i++)
            add("var"+i + ":.word 0");
         pc+=3;
         add(".text "); add(".align 2");
         add(".globl main");
         add("main:"); break;
       }
```

46 Code generation – Mips.java

```
      case IR.ADD    : {
          String right = pop();
          String left  = pop();
          String res   = freeReg();
          add("add " + res + "," + left + "," + right);
          push(res);
          pc++; break;
       }
       case IR.LOAD   : {
          String id = "var" + prog[pc+1];
          String reg = freeReg();
          push(reg);
```

```
            add("lw " + reg + "," + id);
            pc+=2; break;
         }
```

47 Code generation – Mips.java

```
         case IR.STORE  : {
            String id = "var" + prog[pc+1];
            String reg = pop();
            add("sw " + reg + "," + id);
            pc+=2;
            initRegs();
            break;
         }
         case IR.PUSH  : {
            int val = prog[pc+1];
            String res   = freeReg();
            add("li " + res + "," + val);
            push(res);
            pc+=2; break;
         }
```

48 Code generation – Mips.java

```
         case IR.PRINT  : {
            String reg = pop();
            add("move $a0," + reg);
            add("li   $v0,1");
            add("syscall");
            pc++;
            initRegs();
            break;
         }
         case IR.PRINTLN: {
            add("la $a0,newline");
            add("li $v0,4");
            add("syscall");
            pc++; break;
         }
```

49 Code generation – Mips.java

```
         case IR.EXIT   : {
            add("li $v0,10");
            add("syscall");
            return;
         }
         default :
      }
   }
```

```
  }
}
```

50

```
 > java Mips test7.vm | tee test7.s
         .data
 newline:.asciiz "\verb+\+n"
         .text
         .align 2
         .globl main
 main:   li      $s0,42
         li      $s1,3
         add     $s2,$s0,$s1
         move    $a0,$s2
         li      $v0,1
         syscall
         la      $a0,newline
         li      $v0,4
         syscall
         li      $v0,10
         syscall
```

```
> spim -file test7.s
45
```

51 Putting it all together – `Compiler.java`

```
public static void main (String args[]) throws IOException {
    Lex scanner = new Lex(args[1]);
    Parse parser = new Parse(scanner);
    Sem sem = new Sem(parser.ast);
    Opt opt = new Opt(sem);
    GenIR ir = new GenIR(opt.sem);

    if ( args[0].equals("-ir"))
       ir.write();
    else if (what.equals("-mips")) {
       Mips mips = new Mips(ir.code);
       System.out.println(mips.code);
    }
}
```

52 Putting it all together...

```
java Lex test1                # Print the tokens
java Matcher test2            # Print the ``parse tree''
java Parse test2              # Print the AST and syntax errors
java Sem test4                # Print semantic error messages
java Eval test4               # Evaluate the AST
java GenIR test4 > test4.vm   # Generate IR code
java Interpreter test4.vm     # Interpret the IR code
java Opt test5                # Optimize the AST
```

```
java Mips test4.vm > test4.s  # Generate Mips code
spim -file test4.s            # Execute Mips code
java Compiler -ir test4       # Generate IR code
java Compiler -mips test4     # Generate Mips code
```

53 Readings and References

- Read Louden:

  Introduction pp. 1–18, 21–27.

  Lexical Analysis pp. 31–34.

  Syntactic Analysis pp. 95–100.

  Recursive Descent Parsing pp. 143–151.

  Semantic Analysis pp. 257–259.

  Code Generation pp. 397–399.

- or the Dragon Book:

  A Simple Compiler pp. 25–82